Powering Business Worldwide

SM64031
May 2007

Applicable additional manuals:

NONE

Aerospace Group
Conveyance Systems Division
Carter® Brand Ground Fueling Equipment

Maintenance & Repair Manual

3" Unisex Coupling

Model 64031

TABLE OF CONTENTS

PAGE

1.0 INTRODUCTION 3
2.0 EQUIPMENT DESCRIPTION 3
3.0 TABLE OF OPTIONS AND ORDERING INFORMATION 3
4.0 DISASSEMBLY 3
5.0 INSPECTION 4
6.0 REASSEMBLY 4
7.0 TEST 5
8.0 ILLUSTRATED PARTS CATALOG 6

MAINTENANCE, OVERHAUL & TEST INSTRUCTIONS
CARTER PART NUMBER 64031 UNISEX COUPLING

1.0 INTRODUCTION

This manual furnishes detailed instructions covering the maintenance and overhaul of Carter Ground Fueling Model Number 64031, 3" Unisex Couplings and the various options listed in Section 3.0.

2.0 EQUIPMENT DESCRIPTION

Carter Model 64031 Valved Unisex Coupling is a 3 inch hose coupling that is universally connectable to other 64031 Valved Unisex Couplings. The units are qualified in accordance with A-A 59377, Class A which supercedes MIL-C-53071. Section 3.0 details the various options available. Other configurations of Carter units that are available and to which the 64031 will mate are listed in Section 3.0. The basic valved coupling would be procured under the part number 64031 with various options that determine the desired inlet or hose mounting configuration. The exploded views in the figures at the end of the manual include the various options available. Item numbers referenced in Sections 4 through 7 refer to the parts list in Table 1.

3.0 TABLE OF OPTIONS AND ORDERING INFORMATION

The 64031 is available with various inlet or hose mounting configurations as described in the tables below. The units are available in two colors to meet the customers requirements, tan (standard) and green (option V).

DESCRIPTION	OPTION LETTER	DESCRIPTION	OPTION LETTER
C	Adds 100 Mesh Screen	N	Adds 1-1/2" Male NPT inlet
D	Adds 3" Hose Barb Inlet	P	Adds 4" Male Camlock Inlet
E	Adds 4" Hose Barb Inlet	Q	Adds Dust Cap/Plugs, Camlock Type
F	Adds 2" Male Camlock Inlet	R	Adds 3" Female NPT Inlet
G	Adds 2" Female Camlock Inlet	S	Adds 3" Male NPT Inlet
H	Adds D-1/D-2 Inlet Flange	T	Adds 3" MS33786-48 Flanged Inlet
J	Adds 2" Male NPT Inlet	U	Adds 3" Vitaulic Grooved End Inlet
K	Adds 3" Female Camlock Inlet	V	Changes exterior color to green
L	Adds 2” Hose Barb Inlet	W	Adds 4" Male BSPP Inlet
M	Adds 4" Female Camlock Inlet	Z	CRES Interface Locking Lugs

Note: One of the above options letters must be included with the basic part number 64031 to receive a completed unit.

Example: 64031D - 3" Unisex Coupling with 3" Hose Barb Inlet Fitting.

64031KQ – 3” Unisex Coupling with 3” Female Camlock Inlet and Dust Plug.

4.0 DISASSEMBLY

4.1 Remove Screw (1) using a torque wrench, checking the running torque. If the running torque is less than 9.5 in lbs (0.11 m kg), discard the Screw (1). Note: Screw (1) is self-locking and is designed to be reused up to 15 times before replacement is necessary. If a torque wrench is not used to remove it, Screw (1) should be replaced. Remove and discard Packing (2). Holding the unit over a suitable container to collect the Balls (3) in the swivel joint, with the screw hole toward the container, rotate the

inlet fitting to allow the Balls (3) to fall into the container. There should be 41 Balls (3). When all 41 Balls (3) have been collected, remove the inlet adapter (ref. Figure 2 for various inlet types). Note there is a small spring loaded Ball (4) and Spring (5) that are used to maintain electrical continuity. This ball and spring are located on the adapter. As the adapter is removed the ball will become exposed and be pushed out by the spring and may be lost in the removal process. Remove and discard Packing (6).

4.2 Rotate handle 8 to the open position. Remove Screws (7) and Handle Assembly (8). It is not necessary to disassemble Handle Assembly (8) unless it is damaged and in need of repair. Set the Handle Assembly (8) aside for later use.

If necessary to disassemble Handle Assembly (8), use an Allen Key to remove Screw (9) and Spring (10).

4.3 Using an Allen Key, remove Screw (13), turn unit over and remove the second Screw (13) from the opposite end. Using one of the Screws (7) in the Shaft (14) as a removal tool, remove Shaft (14). Remove and discard Packings (15) and (16) and Bushing (17). Remove and discard Bushing (18).

4.4 Reaching in the inlet end, remove Ball (19) from the unit. Push out the Lower Shaft (20). Remove and discard Packings (15) and (16) and Bushing (17).

Remove Seal Wire (22) from inside of Housing (21). Remove Seal Retainer (23) and Seal (24). Discard Seal (24).

4.5 Remove the Bumper (25) only if replacement is needed or if it is necessary to replace Lugs (26) or (27). If necessary, remove Screws (28) from Lugs (26) or (27).

4.7 Do not remove Spring Pin (29) that retains the Lockout Pin (30) unless it is necessary to replace any of these parts. If necessary, using a drift pin, press out Spring Pin (29) and discard it. This will allow the removal of Lockout Pin (30) and Spring (31).

4.8 Remove Seal (32) from unit and discard.

4.9 Do not try to disassemble the Housing (21) to remove the spring loaded Ball (33) or Retainer (34) permanently affixed in the face of the unit. If the ball is damaged, replacement of the Housing (21) will be necessary.

4.10 Peel out and discart Seal (32) from the Dust Cap (36). Note: do not remove center plug from dust cap. It is a pressed fit and never needs replacing. If the obsolete metal Dust Cap Assy (36A) is present and needs replairing, it is recommended that it be replaced with the newer plastic cap (36).

5.0 INSPECTION

It is recommended that all Packings (2), (6), (15) & (16), Seals (24) and (32) and Bushings (17) and (18) be discarded and replaced at each overhaul.

Inspect all metal parts for dings, gouges, abrasions, etc. On all parts except for the Ball (19), use 320 grit paper to smooth and remove sharp edges. Replace any part with damage exceeding 15% of local wall thickness. Use alodine 1200 to touch up bared aluminum. If Ball (19) is scratched or damaged it should be replaced.

Inspect the Bumper (25) for evidence of cracking or wear. Replace as necessary.

Check Lugs (26) and (27) to assure that they are not loose. If loose, remove Bumper (25) to check the tightness of the Screws (28). Screws should be tightened to 6 in-lb.

Count the Balls (3) to make sure that all 41 are present.

Check the ball groove (round bottom) of the inlet swivel. If groove is worn such that burrs exist, use 320 grit paper to smooth and remove sharp edges. Burrs will make it difficult to re-install the part.

Inspect the small spring loaded ball located in the face of the unit. Push the ball in and be sure that it pops back into place. The purpose of this ball is to provide electrical continuity between mating units.

Inspect Screw (9) and Handle (11) for damage that could have been caused by dropping the unit. If either part is bent replace it.

Inspect Dust Cap Assy (36) to make sure that the center portion that is pressed in place remains in place. If it is missing, the

Seal (32) will also be missing, in which event it will be necessary to replace the Cap Assy..

6.0 REASSEMBLY

Reassemble the parts in the reverse order of disassembly noting the following:

6.1 Make certain all components are clean and free from oil, grease, or any other corrosion resistant compound on all interior or exterior surfaces. Wash all parts with cleaning solvent, Federal Specification P-D-680 or equivalent, and dry thoroughly with a clean, lint-free cloth or compressed air.

WARNING!

Use cleaning solvent in a well-ventilated area. Avoid breathing of fumes and excessive solvent contact with skin. Keep away from open flame.

NOTE: A light coat of petrolatum, Federal Specification VV-P-236 or equivalent commercial quality, can be applied to all o-rings and seals for ease of installation. A thin coating should also be applied to the Ball (19).

6.2 When installing Seal (32) into Dust Cap (36) use a finger to be sure that the seal is properly seated in its groove. The same procedure should be used when installing the same Seal (32) into the groove in the Housing (21). These seals are identical and can be interchanged.

6.3 If the Lockout Pin (30) and Spring (31) were removed, it will be necessary to reinstall them using a drift pin to install Spring Pin (29) into Housing (21). Note that the rounded portion of the Lockout Pin (30) is positioned toward the outer diameter of the Housing (21).

6.4 If the Lugs (26) and (27) were removed, install them in their proper positions. Align the holes in the Lugs (26) or (27) with the hole pattern in the Housing (21). Tighten Screws (28) to 15 in-lb.

6.5 Re-install Bumper (25) onto Housing (21) such that the thin lip seal end is facing away from the unit.

6.6 Place Seal (24) into Housing (21) with the flat surface inserted into the Housing (21). Insert Seal Retainer (23) and reinstall Seal Wire (22) into the groove to retain.

6.7 Insert Ball (19) into Housing (21). Place Bushings (17) onto Lower Shaft (20) along with Packing (15). Place Packing (16) into groove in Lower Shaft (20) and insert into Housing (21) and Ball (19) aligning the flats of the two parts, retaining with Screw (13).

6.8 Install Bushing (18) into the groove in the Housing (21). Place Bushing (17) onto Upper Shaft (14) along with Packing (15). Place Packing (16) into groove in Upper Shaft and insert into Housing (21) and Ball (19) aligning the flats of the two parts. Retain with Screw (13).

6.9 If Handle Assembly (8) was disassembled earlier, reinstall Spring (10) and Screw (9) into Handle (11) and bottom out into Knob (12). Handle Assembly (8) can then be assembled using the two Screws (7).

6.10 Place Packing (6) onto Inlet [ref. Fig. 2, items (1) thru (20)] and start the Inlet into the opening in the Housing (21). Install Spring (5) and Ball (4) into hole in Inlet, and holding it in the compressed position, finish installing the Inlet into Housing (21). Insert the 41 Balls (3) into the hole in the Housing (21) by rotating the Inlet while installing the Balls (3). Once all 41 Balls (3) are installed, place Packing (2) onto Screw (1) and install the assembly into the threaded holes to retain the joint. Torque to 76 ± 4 in-lb.

7.0 TEST

7.1 The following test procedures will be accomplished after overhaul:

7.2 Test conditions

Test media shall be JP-8 MIL-T-83133, Jet A, odorless kerosene or Stoddard type solvent MIL-PRF-7024E Type II.

7.3 Functional Test

7.3.1 Using the test unit and a similar valved unisex coupling, make sure that they will connect correctly while both couplings are in closed condition. After connecting the couplings, open the test unit and try to disconnect by applying a counterclockwise motion. The coupling, in open position, will prevent any disconnect attempt. Then close the test unit and disconnect by applying a counter-clockwise motion.

7.3.2 Connect the test unit to another unisex coupling with inlet capped. Connect fluid pressure source capable of 100 psi pressure to the inlet of the test unit. With the Handle Assembly (8) in the open position, apply pressure of 5 and 100 psig to the system and observe for external leakage. There should be no leakage over a period of at least one minute. Reduce the system pressure.

7.3.3 Connect fluid pressure source capable of 100 psi pressure to the inlet of test unit. With the test unit in disconnected condition and the Handle Assembly (8) in the closed position, apply pressure of 5 and 100 psig to the system and observe for external leakage. There should be no leakage over a period of at least one minute. Reduce the system pressure.

7.3.4 Remove test unit from the test system and install the dust cap.

8.0 ILLUSTRATED PARTS CATALOG

Table 1.0 tabulates the parts and sub-assemblies comprising the 64031 Unisex Coupling. The item numbers of the table are keyed to the exploded views of the nozzle diagrammed in Figures 1 and 2.

TABLE 1.0

Refer. To Figure 1

Item	Part Number	Description	Units Per Assembly	Coupling Option	Units/Yr Spares/10
1	220484	Screw	1	All	-
2	MS29512-03	Packing	1	All	10
3	82123	Ball	41	All	-
4	220265	Ball	1	All	5
5	220153	Spring	1	All	5
6	MS29513-234	Packing	1	All	10
7	PL24693C50	Screw	2	All	-
8	47119	Handle Assembly	1	All	-
9	220204	Screw	1	All	-
10	220145	Spring	1	All	-
11	220435	Handle	1	All	-
12	220142	Knob	1	All	-
13	GF16997-32L	Screw	2	All	-
14	220430	Shaft, Upper	1	All	-
15	MS29513-016	Packing	2	All	20
16	MS29513-009	Packing	2	All	20
17	220464	Bushing	3	All	30
18	220466	Bushing	1	All	10
19	220449	Ball	1	All	-
20	220432	Shaft, Lower	1	All	-
21	220429-1	Housing, Tan	1	All but V	-
	220429-2	Housing, Green	1	V	-
22	220470	Wire, Seal	1	All	-
23	220459	Retainer, Seal	1	All	-
24	220465	Seal	1	All	-

Item	Part Number	Description	Units Per Assembly	Coupling Option	Units/Yr Spares/10
25	220468	Bumper	1	All	-
26	220446-1	Lug, Long (aluminum)	1	All but Z, ZV	-
	220800-1	Lug, Long (CRES)	1	Z, ZV	
27	220446-2	Lug, Short (aluminum)	1	All but Z, ZV	-
	220800-2	Lug, Long (CRES)	1	Z, ZV	
28	GF16997-20L	Screw	4	All	-
29	.094x1.000LDP	Pin, Spring	1	All	-
30	220457	Pin, Lockout	1	All	-
31	LC030D-8	Spring	1	All	-
32	220467	Seal	1	All	10
33	220265	Ball	1	All	-
34	220334	Retainer	1	All	-
35	220153	Spring	1	All	-
36	47395	Cap Assy	1	All	-
37	28-2-G	Sleeve	2	All	-
38	82499-2000	Cable	1	All	-
39	220482	Ring	1	All	-
36A	47121-1	Cap Assy, Tan (on older units)	-	All but V	-
	47121-2	Cap Assy, Green (on older units)	-	V	-
-	KD64031-1	Kit of seals for 64031 (any option except G, K & M; use kits -2 thru -4 for these options) with single coupling - contains items 2,6,7,13,15,16,17,18,24,28,32.			
-	KD64031-2	Kit of seals for 64031JG or JGV only - contains items 2, 6, 7, 13, 15, 16, 17, 18, 24, 28, 32, 13A			
-	KD64031-3	Kit of seals for 64031KS only - contains items 2, 6, 7, 13, 15, 16, 17, 18, 24, 28, 32, 15A.			
-	KD64031-4	Kit of seals for 64031MS only - contains items 2, 6, 7, 13, 15, 16, 17, 18, 24, 28, 32 14A.			

TABLE 2.0
Refer to Figure 2

Item	Part Number	Description	Units Per Assembly	Coupling Option	Units/Yr Spares/10
1	221498-1	Inlet, 2” Hose Barb, Tan	1	L	-
	221498-2	Inlet, 2” Hose Barb, Green	1	LV	-
2	220381-1	Inlet, 3" Hose Barb, Tan	1	D	-
	220381-2	Inlet, 3" Hose Barb, Green	1	DV	-
3	221085-1	Inlet, 4” Hose Barb, Tan	1	E	-
	221085-2	Inlet, 4” Hose Barb, Green	1	EV	-
4	220503-1	Inlet, 3" MS33786-48 Flange, Tan	1	T	-
	220503-2	Inlet, 3" MS33786-48 Flange, Green	1	TV	-
5	220510-1	Inlet, 3" Victaulic Groove, Tan	1	U	-
	220510-2	Inlet, 3" Victaulic Groove, Green	1	UV	-
6	47305-1	Inlet, D-2/D-2 Flange, Tan	1	H	-
	47305-2	Inlet, D-2/D-2 Flange, Green	1	HV	-
7	221183-1	Inlet, 1-1/2” Male NPT, Tan	1	N	-
	221183-2	Inlet, 1-1/2” Male NPT, Green	1	NV	-
8	220384-1	Inlet, 2" Male NPT, Tan	1	J	-
	220384-2	Inlet, 2" Male NPT, Green	1	JV	-
9	220455-1	Inlet, 3" Male NPT, Tan	1	S	-
	220455-2	Inlet, 3" Male NPT, Green	1	SV	-
10	221243-1	Inlet, 4” Male BSPP, Tan	1	W	-
	221243-2	Inlet, 4” Male BSPP, Green	1	WV	-
11	221084-1	Inlet, 3” Female NPT, Tan	1	R	-
	221084-2	Inlet, 3” Female NPT, Green	1	RV	-
12	220382-1	Inlet, 2" Male Camlock, Tan	1	F	-
	220382-2	Inlet, 2" Male Camlock, Green	1	FV	-
13	220383-1	Inlet, 3" Male Camlock, Tan	1	P	-
	220383-2	Inlet, 3" Male Camlock, Green	1	PV	-
14	20DAL-TN	Inlet, 2" Female Camlock, Tan	1	G	-
	20DAL-GN	Inlet, 2" Female Camlock, Green	1	GV	-
14A	MS27030-6	Gasket	1	G, GV	10
15	30DAL-TN	Inlet, 3" Female Camlock, Tan	1	K	-
	30DAL-GN	Inlet, 3" Female Camlock, Green	1	KV	-
15A	MS27030-8	Gasket	1	K, KV	10
16	4030DAL-TN	Inlet, 4" Female Camlock, Tan	1	M	-
	4030DAL-GN	Inlet, 4" Female Camlock, Green	1	MV	-
16A	MS27030-9	Gasket	1	M, MV	10
17	GF27028-11-TN	Dust Cap, 2” Female Camlock, Tan	1	FQ	-
	GF27028-11-GN	Dust Cap, 2” Female Camlock, Green	1	FQV	-
18	GF27028-17-TN	Dust Cap, 4” Female Camlock, Tan	1	PQ	1
	GF27028-17-GN	Dust Cap, 4” Female Camlock, Green	1	PQV	1
19	GF27029-11-TN	Dust Plug, 2” Male Camlock, Tan	1	GQ	1
	GF27029-11-GN	Dust Plug, 2” Male Camlock, Green	1	GQV	1

Item	Part Number	Description	Units Per Assembly	Coupling Option	Units/Yr Spares/10
20	GF27029-15-TN	Dust Plug, 3” Male Camlock, Tan	1	KQ	1
	GF27029-15-GN	Dust Plug, 3” Male Camlock, Green	1	KQV	1
21	GF27029-17-TN	Dust Plug, 4” Male Camlock, Tan	1	MQ	1
	GF27029-17-GN	Dust Plug, 4” Male Camlock, Green	1	MQV	1
22	47307-100	Screen Assy	1	C	-
23	47306-100	Screen	1	C	-
24	221181	Ring, Retaining	1	C	-
25	221182	Ring, Inside Retaining	1	C	-

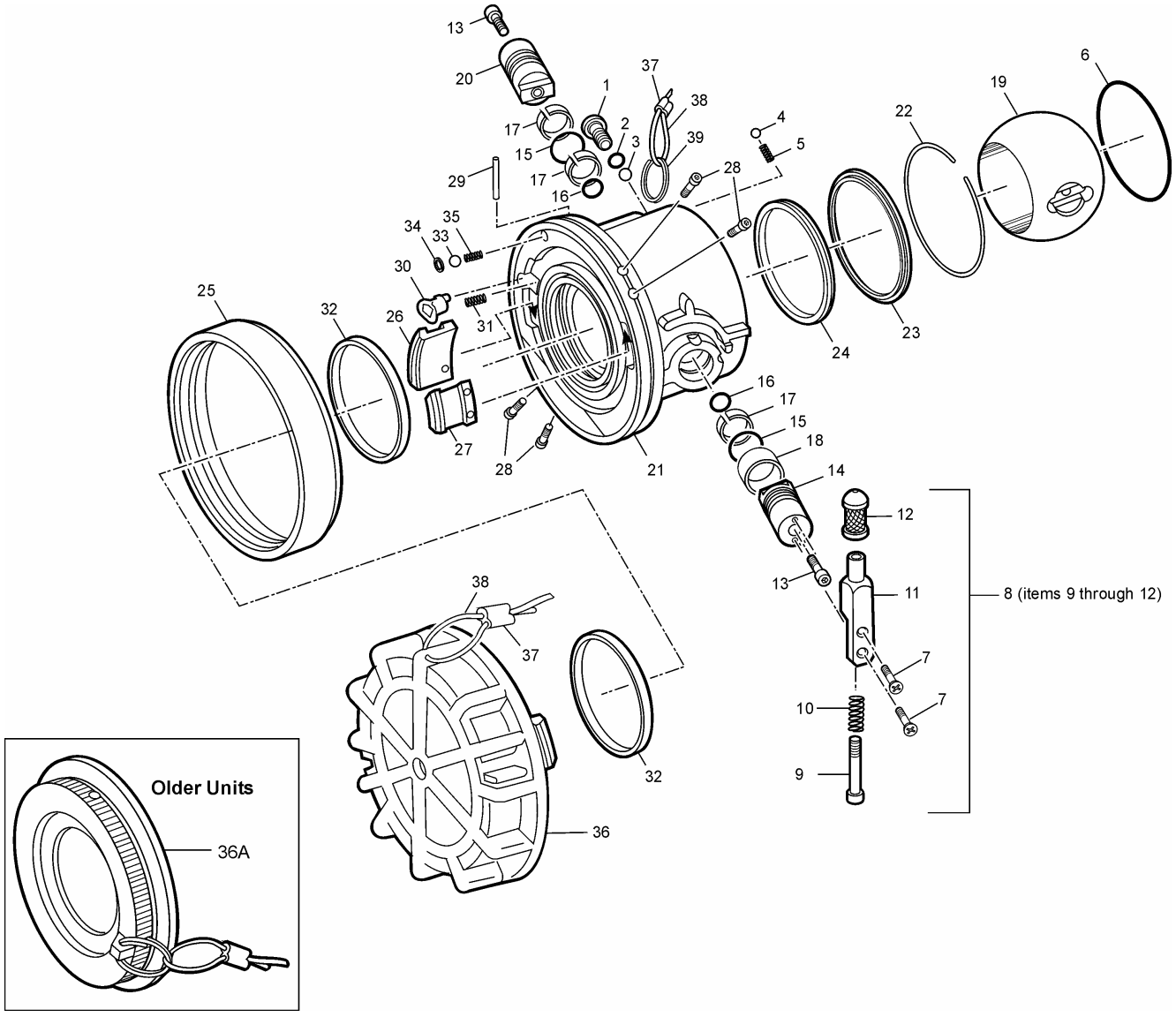
13
20
1
37
38
39
2
3
17
15
17
16
29
4
5
28
22
19
6
34
33
35
30
31
25
32
26
27
28
21
24
23
16
17
15
18
14
12
13
11
8 (items 9 through 12)
7
7
10
9
38
37
32
36
Older Units
36A

FIGURE 1

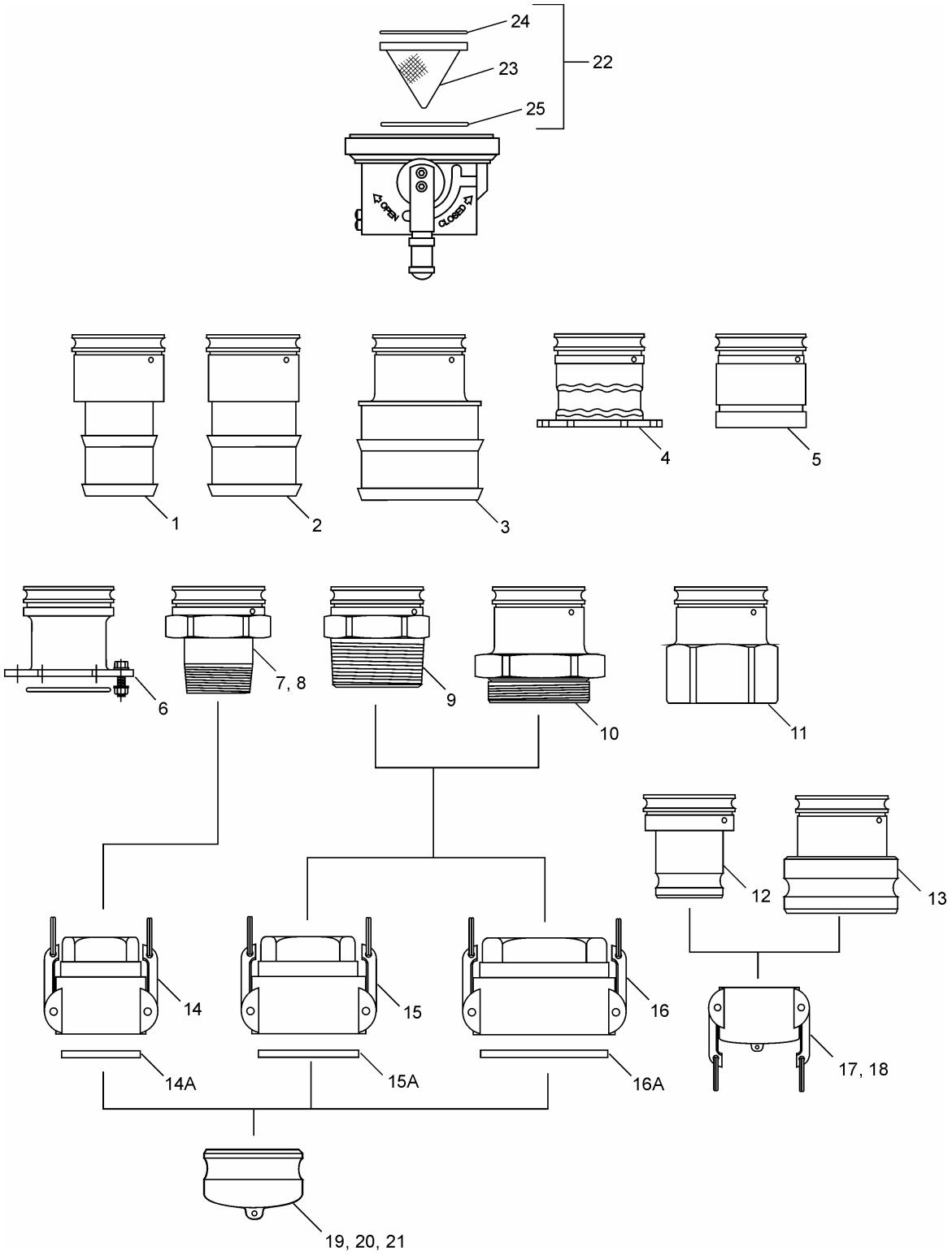

Figure 2

Options

Aerospace Group
Conveyance Systems Division
9650 Jeronimo Rd
Irvine, CA 92618
Ph (949) 452-9500
Fax (949) 452-9992